MICROMIND SYSTEM FAMILY

Autonomy, EW Resilience, and GNSS-Denied Navigation Suite for Tactical UAV Operations Concept Paper – Version 6 (PART ONE)

TABLE OF CONTENTS

MICROMIND SYSTEM FAMILY 1

1 INTRODUCTION 5

2 OPERATIONAL CONTEXT & THREAT DRIVERS 6

2.1 THE MODERN EW BATTLEFIELD — GLOBAL LESSONS AND INDIAN REALITIES 6
2.2 BASELINE CONTESTED MISSION PROFILE (BCMP-1 8

3 SYSTEM PHILOSOPHY 10

3.1 THE CORE PROBLEM 10
3.2 DESIGN OBJECTIVES 11
3.3 BOUNDED AUTONOMY & MULTI-LAYER REDUNDANCY 12
3.4 ASSURED LETHALITY OVER COST 13
3.5 CONTINUOUS LEARNING UNDER ADVERSARIAL CONDITIONS 13

4 MICROMIND SYSTEM FAMILY 15

4.1 SYSTEM ROLE & BOUNDARY 15
4.2 MICROMIND-X — ONBOARD MISSION COMPUTER 15
4.3 NANOCORTEX — AUTONOMY & EXECUTION ENGINE 17
4.4 MICROMIND-OS — COMMANDER MISSION DEFINITION SEGMENT 18
4.5 INTEGRATION PHILOSOPHY — AUTONOMY AS A PAYLOAD 19
4.6 SYSTEM AUTHORITY CHAIN 20

5 DEPLOYMENT MODEL & MATURITY PATH 21

5.1 STAGE 1 – MVP DEPLOYMENT (TRL 4-5) 21
5.2 STAGE 2 — GROWTH DEPLOYMENT (TRL 6–7) 22
5.3 FLEET-WIDE LEARNING AND KNOWLEDGE CONSOLIDATION 24
5.4 OPERATIONAL BOUNDARIES 24
5.5 SUMMARY OF DEPLOYMENT STAGES 24

6 HARDWARE REQUIREMENTS 25

6.1 DESIGN PHILOSOPHY 25
6.2 6.2 MVP SWAP ENVELOPE 25
6.3 COMPUTE REQUIREMENTS 26

6.4 SENSOR BASELINE (MVP) 26
6.5 INTERFACES 26
6.6 TIMING AND SYNCHRONISATION 27
6.7 SECURITY AND INTEGRITY 27
6.8 GROWTH AND OPTIMISATION PATH 27
6.9 ENVIRONMENTAL AND QUALIFICATION TARGETS 28
6.10 SUMMARY 28

7 TECHNOLOGY ADOPTION AND EVOLUTION STRATEGY 29

7.1 LEVERAGING ESTABLISHED AUTONOMY RESEARCH (UNDER EVALUATION) 29
7.2 DUAL-USE SUPPLY CHAIN CONSIDERATIONS (UNDER INVESTIGATION) 29
7.3 SYNTHETIC TRAINING AND SIMULATION ("DIGITAL TWIN") 30
7.4 SUMMARY OF ADOPTION PHILOSOPHY 30

8 OPERATIONAL USE CASES 31

8.1 THE "MOVING RADAR" SCENARIO (COUNTER-ISR STRIKE) 31
8.2 THE "JAMMER KILLER" SCENARIO (SEAD/DEAD) 31
8.3 THE "HIDDEN LAUNCHER" SCENARIO (TIME-CRITICAL) 32

9 GLOSSARY OF TERMS USED 33

TABLE OF FIGURES

FIGURE 1: EW BATTLESPACE OVERVIEW 5
FIGURE 2: EW THREAT LANDSCAPE 8
FIGURE 3: EW BATTLESPACE TRANSFORMATION 11
FIGURE 4: MICROMIND-X MISSION COMPUTER - INTERNAL ARCHITECTURE 16
FIGURE 5: NANOCORTEX - AUTONOMY, DECISION & NAVIGATION FLOW 17
FIGURE 6: MICROMIND-OS MISSION PLANNING CONCEPT 19
FIGURE 7: MICROMIND FAMILY - SYSTEM-LEVEL ARCHITECTURE 22
FIGURE 8: SENSOR FUSION PIPELINE 23
FIGURE 9: EW ENGINE ARCHITECTURE – JAM & SPOOF DETECTION 24
FIGURE 10: BIM (BEACON & INTEGRITY MONITOR) ARCHITECTURE 25
FIGURE 11: TERMINAL GUIDANCE & DMRL 26
FIGURE 12: CEMS ARCHITECTURE 27
FIGURE 13: ZPI BURST SCHEDULER 28
FIGURE 14: TERMINAL GUIDANCE & DMRL 29

1 Introduction

The era of permissive air environments is over. The conflict in Ukraine has demonstrated that the primary challenge for Unmanned Aerial Systems (UAS) is no longer aerodynamics or payload capacity, but **electromagnetic survivability and terminal kill assurance.**

Modern warfare is a proxy testbed for global technologies. While Russia fights in Ukraine, the tactics and electronic warfare (EW) doctrines being perfected there are rapidly proliferating. If India enters a conflict on its western or northern borders, it will not face legacy systems; it will face "Chinese EW with a Pakistani face"—sophisticated, high-power, adaptive jamming comparable to the Russian systems seen in Eastern Europe.

To win in this environment, we must prepare at "Ukraine Scale." This does not mean launching cheap hobby drones in hoards. It means ensuring that when we launch a munition against a high-value Strategic Radar or an Air Defence Battery, it connects.

The MicroMind Family is engineered **not as a generic autopilot, but as a "Virtual Operator" that resides onboard the munition.** It equips existing or future Indian UAVs with the cognitive resilience to:

- Navigate without GNSS **over strategic distances (100km+).**
- **Execute "Single-Cycle Closure"** (Find, Fix, and Strike in one sortie) even when the target displaces.
- **Survive the "Last 10 Seconds" (L10s)** when the command link is inevitably severed by hostile jamming.

Our Motto: One Mission, One Kill.

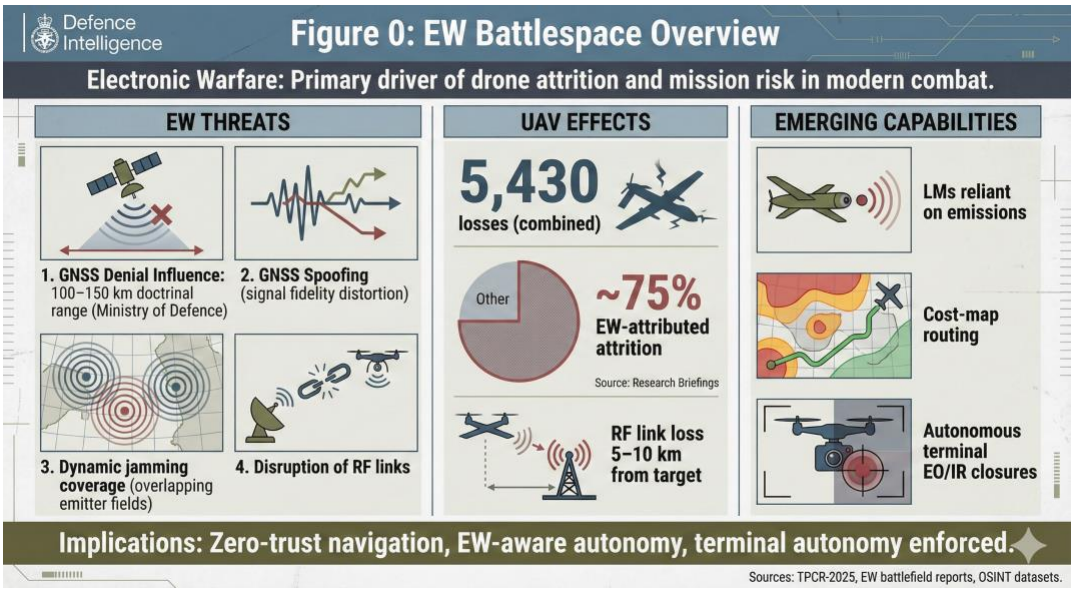

Figure 1: EW Battlespace Overview

The following threat analysis establishes the baseline assumptions under which MicroMind is designed.

2 Operational Context & Threat Drivers

2.1 The Modern EW Battlefield — Global Lessons and Indian Realities

The war in Ukraine has become the world's most data-rich demonstration of how **Electronic Warfare (EW)**, not aerodynamics or airframe sophistication, now dictates UAV survivability. Every major study and open-source analysis point to the same conclusion: **the electromagnetic spectrum is the new front line**.

2.1.1 What Ukraine Taught the World

Across Eastern Ukraine, UAV detachments operate under an environment where **every external signal is contested**. Key observations from 2022–2024 include:

- **Sector-scale GNSS denial**: Russian Pole-21, Tirada-2, and R-330Zh systems routinely suppress GPS/GLONASS across 30–100 km fronts.
  Source: RUSI "Preliminary Lessons in Conventional Warfare from Ukraine", 2023.
- **Precision GNSS spoofing**: UAVs receive false coordinates engineered to steer them into friendly kill-zones or crash into terrain.
  Source: Ukrainian MoD reports; OSINT geolocation datasets (2023–24).
- **Dynamic jamming footprints**: Mobile EW vehicles reposition mid-sortie; pre-planned routes fail within minutes.
  Source: RUSI analysis on adaptive EW in Donbas, 2023.
- **Guaranteed loss of RF link**: Telemetry almost always drops 5–10 km from high-value targets, forcing autonomous terminal action.
  Source: Ukrainian AF UAS Command interviews, 2024.
- **Thermal decoys and multispectral camouflage**: Mobile radars and artillery routinely deploy thermal traps, heating blankets, and decoy profiles that defeat simple EO guidance.
  Source: Janes Defence Weekly analytical update on decoys, 2023.
- **>90% attrition of commercial drones**: Only UAVs with **autonomous navigation + terminal autonomy** survive inside dense jamming bubbles.
  Source: RUSI, Ukrainian UAS attrition data, 2023–24.

Ukraine's central lesson:
Any UAV that depends on GNSS or persistent operator control will fail in a modern EW theatre.

These lessons are not unique to Ukraine; they represent the future baseline for any peer-level conflict — including India's western and northern theatres.

2.1.2 What This Means for India

While the conflict in Ukraine provides the most visible illustration of contemporary EW-driven UAV attrition, the operational environment faced by Indian UAVs is expected to be **equal or more complex**, driven by a combination of geography, adversary capability, and doctrine.

India's western, northern, and maritime theatres are characterised by a **China-origin electronic warfare ecosystem**, increasingly visible through deployments along the LAC and through technology transfer and doctrinal alignment with Pakistan.

Key characteristics of this environment include:

- **High-power, wide-area EW systems** deployed by PLA EW brigades, capable of sector-scale jamming and GNSS suppression over extended frontages.
- **Precision GNSS spoofing infrastructure**, designed not merely to deny navigation but to shape UAV trajectories using false Doppler, constellation mismatch, and time-offset manipulation.
- **Integrated EW–ISR doctrine**, where jammers, passive RF sensors, and air-defence assets operate as a coordinated system rather than isolated emitters.
- **Distributed direction-finding (DF) networks**, enabling rapid geolocation of UAV command links, relay drones, or payload emissions, increasing attrition risk with every RF transmission.
- **Terrain-amplified EW effects** in mountainous and forested regions, where ridgelines, valleys, and shadow zones produce highly non-linear jamming and spoofing footprints.
- **Heavily defended terminal zones** around high-value assets—radars, air-defence batteries, missile units, and command centres—where GNSS reliability and RF connectivity are least likely to exist.
- **Adversary use of decoys and multispectral deception**, including thermal traps, dummy emitters, and signature manipulation intended to defeat simple EO or RF homing logic.

When combined, these factors create an operational environment in which Indian UAVs must assume:

- GNSS availability cannot be trusted for the majority of the mission
- RF command and telemetry links will be intermittent or absent at critical phases
- EW conditions will evolve dynamically during the sortie
- Terminal engagement will occur under the highest level of electronic contestation

This environment fundamentally alters the design assumptions for Indian UAV systems. Platforms optimised for permissive or moderately contested conditions will experience **systemic mission failure** when exposed to this reality.

Accordingly, Indian UAV capability development must prioritise:

- ***Onboard decision continuity independent of external control***
- ***Navigation and targeting resilience without reliance on GNSS***
- ***Behaviour that degrades deterministically under uncertainty***
- ***Mission execution models that assume isolation, not connectivity***

The operational conditions described above are subsequently formalised in this document into a **single baseline mission construct**, which serves as the normative reference for the MicroMind system.

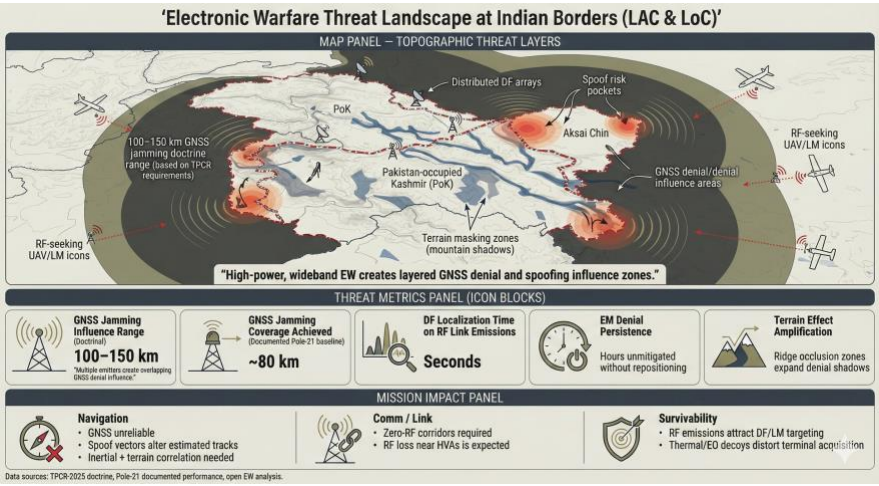

Figure 2: EW Threat Landscape

2.2 Baseline Contested Mission Profile (BCMP-1

(Normative Operational Reference)

The operational conditions described in Sections 2.1 and 2.2 are formalised into a single baseline reference construct termed the **Baseline Contested Mission Profile (BCMP-1)**. BCMP-1 represents the **default operational environment** assumed for the design, behaviour, and performance assessment of the MicroMind System Family.

Unless explicitly stated otherwise, **all subsequent sections of this document assume BCMP-1 conditions**.

2.2.1 BCMP-1 Assumed Conditions

Domain	Assumption
GNSS	Sector-scale denial with precision spoofing
RF Link	Intermittent or complete loss expected
EW	Adaptive jamming by mobile emitters

Domain	Assumption
Terrain	Masking required to manage DF exposure
Terminal Zone	Highest EW density; zero-link execution
Targets	Presence of decoys and multispectral deception
Decision Window	Compressed; no external re-tasking

BCMP-1 is **not a worst-case or stress scenario**.
It represents the **expected operating condition** for peer-level or near-peer conflict environments relevant to Indian UAS operations.

3 System Philosophy

3.1 The Core Problem

As established in Section 2, contemporary UAV operations are conducted in environments where external navigation aids, communication links, and continuous human supervision **cannot be assumed to persist**.

Under **BCMP-1 conditions**, the dominant failure mode of most existing UAV platforms is not airframe loss or payload malfunction, but **loss of mission continuity** — the inability to continue executing authorised intent once GNSS trust degrades, RF links are disrupted, or the terminal phase is entered.

Most present-day UAV architectures remain dependent on:

- GNSS-centric navigation and waypoint execution
- Continuous or frequent operator correction
- Static routing assumptions
- Rule-based autonomy that does not account for adversarial behaviour

Operational evidence from recent conflicts shows that these dependencies lead directly to **systemic mission failure**, even when individual subsystems perform nominally.

The core problem addressed by MicroMind is therefore defined as:

How to ensure reliable execution of commander-authorised missions when external control, navigation references, and communications are degraded or unavailable.

This problem cannot be resolved through incremental improvements to autopilots, datalinks, or payload sensors alone. It requires a distinct onboard system whose primary function is **decision continuity under adversarial conditions**.

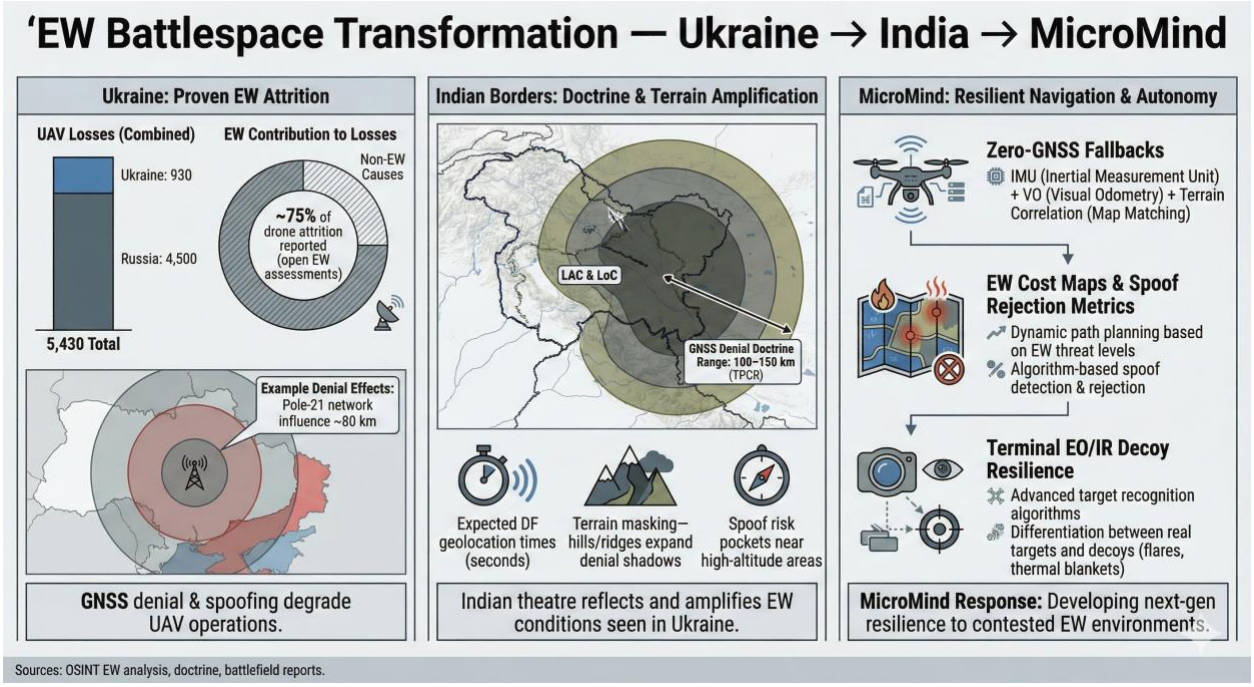

Figure 3: EW Battlespace Transformation

3.2 Design Objectives

MicroMind is designed around a **small number of explicit system objectives**, which together define its role, scope, and behaviour under BCMP-1 conditions.

Objective 1 — Mission Continuity Under Isolation

Ensure that authorised missions continue to execute correctly when GNSS and RF links degrade or fail.

Objective 2 — Extension of Commander Intent Onboard

Embed commander intent, constraints, and authorised actions into the aircraft prior to launch, so that intent remains actionable throughout the mission lifecycle.

Objective 3 — Deterministic Autonomy in Contested Environments

Apply autonomy as a deterministic execution mechanism that adapts to environmental uncertainty without deviating from authorised bounds.

Objective 4 — Assured Terminal Execution

Enable reliable terminal action in the most contested phase of the mission, where external control is least likely to exist.

Objective 5 — Survivability Over Platform Optimisation

Prioritise assured mission outcome over platform-level performance or cost optimisation in high-value and time-critical missions.

These objectives collectively define **what MicroMind is designed to achieve**. How they are realised is addressed in subsequent sections.

3.3 Bounded Autonomy & Multi-Layer Redundancy

MicroMind applies autonomy as a **failsafe execution layer**, not as free-form decision-making.

The system is designed to **digitise the OODA loop** (Observe–Orient–Decide–Act) of a human pilot and execute it onboard when external control is no longer available.

Autonomy is therefore **intent-driven and envelope-bound**.

When the command link degrades or is lost, the system does not abort by default. Instead, it continues execution **only if** real-time conditions satisfy the commander's pre-authorised criteria, including:

- Ingress and egress corridors
- Altitude and terrain-masking constraints
- No-fly and no-impact zones
- Civilian reference layers
- Rules of Engagement (RoE)
- Pre-authorised fallback behaviours
- Terminal safety envelope (L10s-SE)

Terminal execution is authorised only when sensed target location and signature match the pre-defined intent.

To ensure reliability under BCMP-1 conditions, MicroMind employs **multi-layer redundancy** across navigation, perception, and confidence assessment, enabling continued execution even under:

- Complete GNSS loss
- RF link denial
- GNSS spoofing
- Visual degradation or obstruction
- Sensor drift
- Hostile EW saturation

Autonomy in MicroMind therefore **extends commander authority into the terminal phase**, rather than replacing it.

3.4 Assured Lethality Over Cost

In high-value asset (HVA) strike missions, platform cost is a secondary consideration relative to mission outcome.

The operational value of a munition is determined by its **probability of successful target engagement** under contested conditions, not by its unit price. Even a comparatively expensive airframe is cost-effective if it reliably neutralises a strategic radar, air-defence battery, or long-range artillery system protected by layered A2/AD defences.

MicroMind is designed to maximise this outcome by **upgrading existing airframes into precision strike assets** capable of:

- penetrating heavily defended electromagnetic environments, and
- executing terminal actions reliably under isolation.

In effect, MicroMind converts conventional UAV platforms into **assured-effect munitions**, where mission success is treated as the primary design metric.

3.5 Continuous Learning Under Adversarial Conditions

MicroMind treats learning as a **system-level function**, not an operator-dependent activity.

Each mission is executed deterministically within its authorised envelope, while simultaneously generating structured data to improve future missions. Learning therefore occurs **between sorties**, without introducing unpredictability during active execution.

During each mission, the system observes and records:

- Real-time RF anomalies and jammer characteristics
- Spoofing signatures and GNSS integrity transitions
- Terrain-masking effectiveness
- Confidence evolution across navigation and perception layers
- Terminal-phase behaviour and outcomes

MicroMind-X securely logs these observations, including:

- EW anomalies and signature patterns
- Link degradation and loss events
- Terrain correlation successes and failures
- Terminal engagement behaviour
- Autonomy decisions and their outcomes

Post-mission, these records are consolidated to build a **sector-level EW and survivability knowledge base**, enabling future mission planning to account for observed adversary behaviour, terrain effects, and system performance.

This approach allows MicroMind to **adapt across missions**, while remaining fully deterministic and rule-bound within each mission.

4 MicroMind System Family

The MicroMind System Family is designed to ensure **reliable mission execution under BCMP-1 conditions**, where GNSS, RF connectivity, and continuous external control cannot be assumed.

MicroMind achieves this by separating **mission intent definition**, **onboard state construction**, and **autonomous execution** into three tightly coupled but functionally distinct elements, while **explicitly preserving the integrity of the host flight-control system**.

This separation is deliberate and foundational.

4.1 System Role & Boundary

MicroMind is an onboard autonomy and mission-execution system. It is not a flight controller, vehicle stabilisation system, or autopilot replacement.

The MicroMind system operates above the flight-control layer, issuing high-level mission and trajectory intent, while relying on the host autopilot (e.g., PX4) to perform:

- attitude stabilisation
- actuator control and mixing
- low-level navigation primitives
- vehicle safety enforcement and failsafe

This boundary ensures that MicroMind enhances mission reliability without modifying or duplicating vehicle-control functionality.

4.2 MicroMind-X — Onboard Mission Computer

System Role
MicroMind-X is the onboard mission computer responsible for constructing and maintaining the aircraft's **authoritative operational state** under contested conditions.

It functions as the system's **fusion, integrity, and orchestration layer**, converting raw sensor inputs and EW observations into a unified state representation suitable for autonomous execution.

Primary Responsibilities

- Secure loading and validation of cryptographically signed mission envelopes
- Multi-sensor fusion across IMU, EO/IR, GNSS (with integrity monitoring), and SDR inputs
- GNSS trust evaluation and integrity scoring (BIM)
- Observation and characterisation of the local EW environment

- Cooperative EW information generation (CEMS)
- Scheduling of low-probability-of-intercept communication micro-bursts (ZPI)
- Secure, tamper-evident logging of all mission-relevant events

System Output

MicroMind-X produces a continuously updated **Unified State Vector**, representing navigation confidence, environmental assessment, and threat context.

This state vector is exported as the **sole authoritative input** to the autonomy engine.

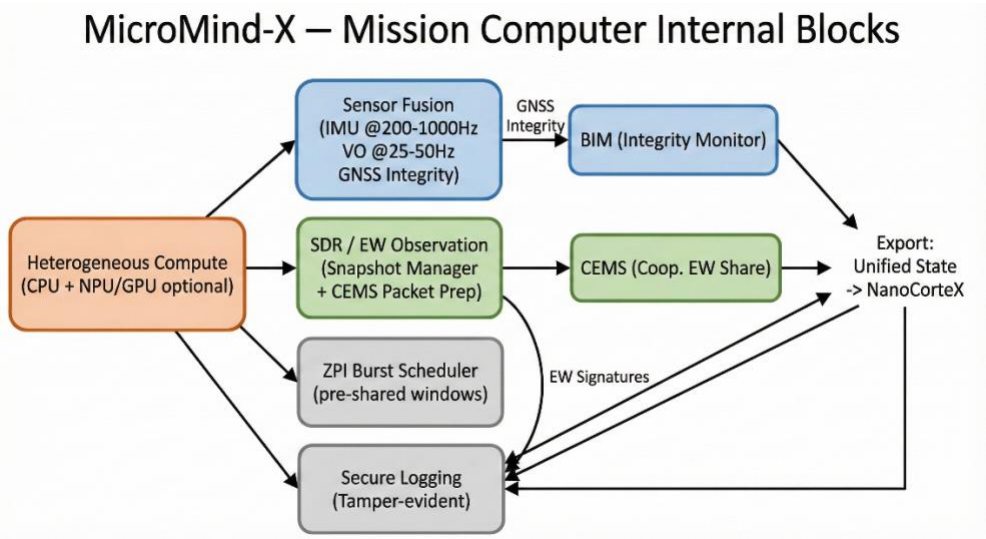

Figure 4: MicroMind-X Mission Computer - Internal Architecture

4.3 NanoCorteX — Autonomy & Execution Engine

System Role
NanoCorteX is the autonomy engine responsible for **interpreting the mission envelope** and **executing authorised behaviour** based on the state provided by MicroMind-X.

It delivers **deterministic, auditable autonomy** under degraded or ambiguous conditions, including complete loss of GNSS and RF connectivity.

Primary Responsibilities

- GNSS-denied navigation and continuity
- Terrain correlation and drift correction
- EW-responsive routing and behaviour selection
- Spoof detection and rejection
- Multi-frame target validation and decoy filtering (DMRL)
- Terminal EO/IR lock, refinement, and guidance
- Enforcement of the Last-10-Second Safety Envelope (L10s-SE)
- Silent Homing Mode (SHM) execution
- Selection of pre-authorised fallback behaviours under degraded confidence

NanoCorteX executes **only** those actions explicitly permitted by the mission envelope. All autonomous decisions are **traceable and logged**, including the state conditions and constraints under which they were taken.

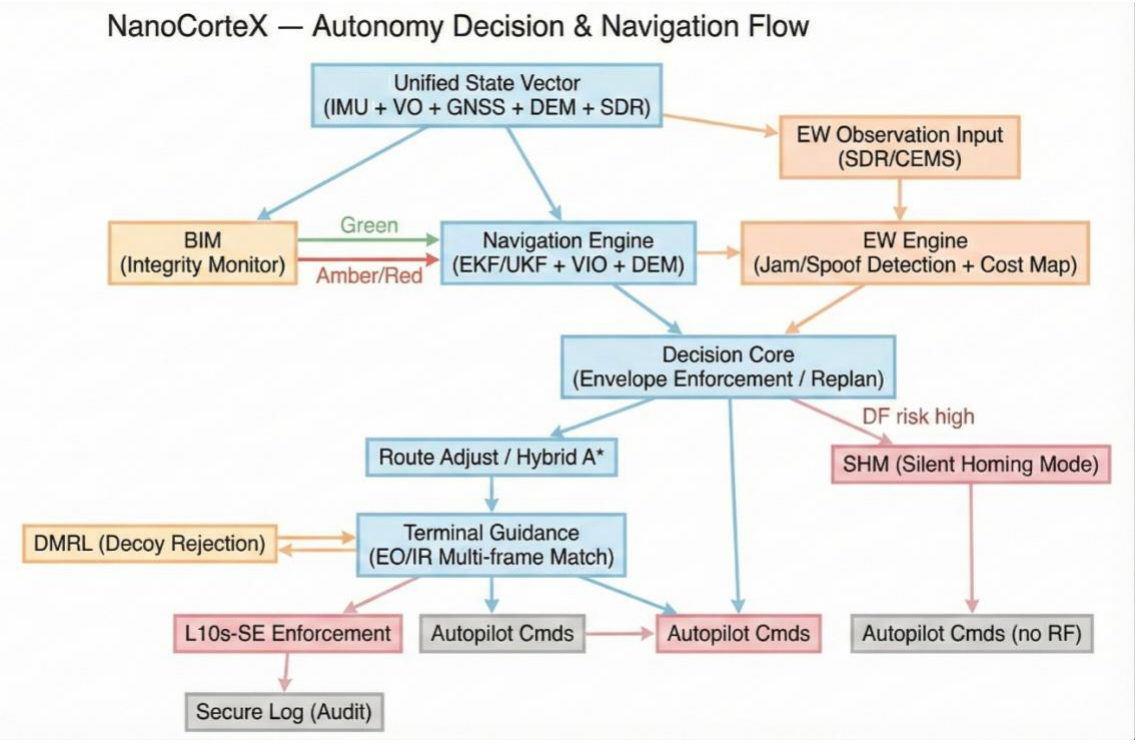

Figure 5: NanoCorteX - Autonomy, Decision & Navigation Flow

4.4 MicroMind-OS — Commander Mission Definition Segment

System Role

MicroMind-OS is the commander-facing mission definition system used to author, validate, and authorise missions prior to launch.
It serves as the **sole authority** for defining mission intent, constraints, and authorised behaviours, ensuring that all autonomy executed onboard remains grounded in commander approval.

Inputs Integrated

- Digital Elevation Models (DEM)
- EW heatmaps and historical threat intelligence
- Civilian, restricted, and protected zones
- No-fly and no-impact boundaries
- Rules of Engagement (ROE)
- Terminal safety constraints
- Pre-authorised fallback behaviours
- Last-10-Second Safety Envelope (L10s-SE) parameters

System Output

MicroMind-OS generates a **cryptographically signed Mission Envelope** containing:

- Primary and alternate ingress/egress corridors
- Approach geometry and terminal constraints
- Permitted behaviour set
- Terminal guidance and engagement rules
- Fallback logic and abort criteria

This envelope is validated and enforced onboard as the **highest-authority mission reference**.

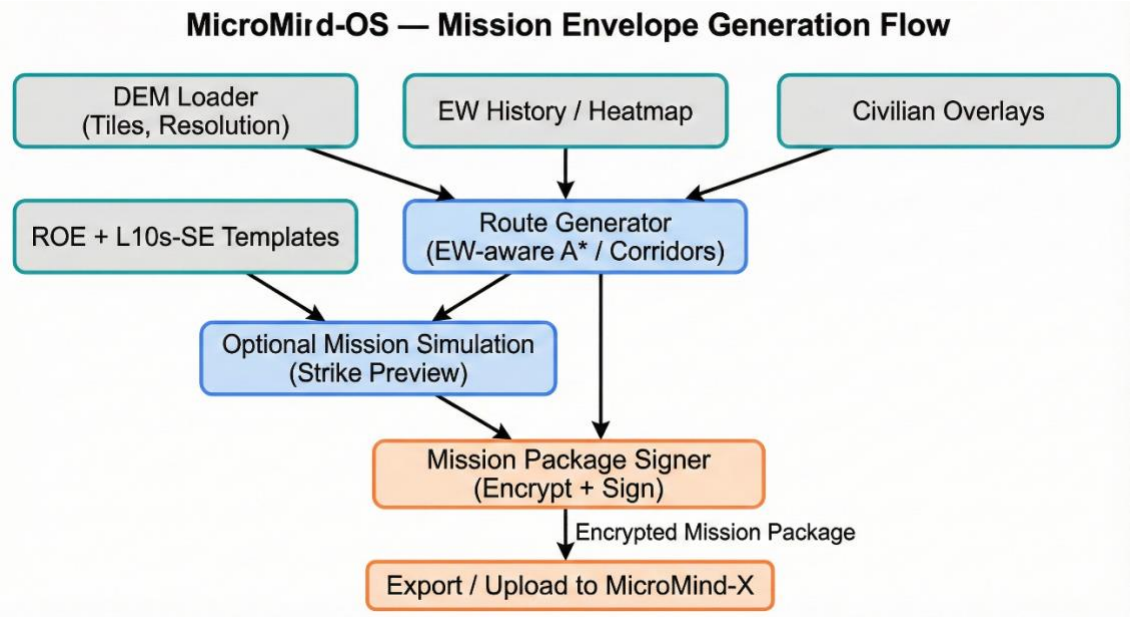

Figure 6: MicroMind-OS Mission Planning Concept

4.5 Integration Philosophy — Autonomy as a Payload

MicroMind is architected as a **self-contained autonomy payload**, informed directly by lessons from large-scale autonomy programmes such as UniPilot and the DARPA Subterranean Challenge.

The system integrates with host UAV platforms through **standard, well-defined command and telemetry interfaces**, without requiring modification of the underlying flight-control core.

4.5.1 Integration Principles

- MicroMind issues **high-level mission and trajectory intent**, not low-level control commands
- Vehicle stabilisation, actuation, and safety enforcement remain with the host autopilot
- No custom forks or deep modifications of PX4 (or equivalent) are required
- Interfaces are platform-agnostic and replaceable
- Autonomy logic remains portable across airframes and vehicle classes

This approach ensures:

- rapid integration timelines
- avoidance of platform-specific technical debt
- preservation of flight-control certification integrity
- scalability across diverse UAV fleets

4.6 System Authority Chain

Within the MicroMind System Family:

- **MicroMind-OS defines and authorises intent**
- **MicroMind-X constructs the operational state**
- **NanoCorteX executes authorised behaviour**
- **The host autopilot (e.g., PX4) executes vehicle control**

No element operates outside its assigned authority.
No element bypasses the mission envelope.
No element replaces the flight-control system.

This separation of responsibility is fundamental to the system's **predictability, auditability, and operational acceptance**.

5 Deployment Model & Maturity Path

MicroMind is designed for **progressive deployment**, allowing early validation of core autonomy under contested conditions while preserving architectural continuity as the system matures.

The deployment model explicitly separates:

- **onboard autonomy and execution**, which are validated early, from
- **mission authoring and operator interfaces**, which are introduced at higher readiness levels.

This ensures that autonomy capability is not gated by UI complexity or deep platform integration.

5.1 Stage 1 – MVP Deployment (TRL 4-5)

Deployment Objective

Validate **onboard decision continuity and autonomous execution under BCMP-1 conditions**, using a minimal, controlled integration footprint.

The MVP focuses on proving:

- MicroMind-X (state construction, integrity, confidence)
- NanoCorteX (bounded autonomy and execution)
- Clean, payload-style integration with an existing autopilot (e.g., PX4)

5.1.1 Integration Model — Retrofit Mode

In the MVP stage, MicroMind is deployed as a **retrofit autonomy payload** integrated into existing UAV platforms with minimal architectural change.

Key characteristics:

- No modification of the host flight-control core
- Autopilot remains responsible for stability, actuation, and safety
- MicroMind operates strictly at the **mission and behaviour layer**

Typical Interfaces

- CAN / UAVCAN — high-rate navigation and attitude setpoints
- UART / MAVLink — mission envelope enforcement and override pathways
- Ethernet — high-bandwidth EO/IR ingest and SDR data streams
- Direct SDR integration (USB3 / PCIe) — EW sensing and spectrum observation

Retrofit integration requires only the addition of the MicroMind-X compute block and alignment of sensor interfaces.

5.1.2 Intent Definition and Injection (MVP)

In the MVP stage, **commander intent is injected offline** using a predefined Interface Control Document (ICD).

Key properties:

- Intent is expressed as a **Mission Envelope**, authored prior to launch
- The envelope includes:
  - mission objectives
  - spatial and temporal constraints
  - authorised behaviours
  - terminal safety envelope (L10s-SE)
  - fallback logic
- The envelope is:
  - static for the duration of the mission
  - immutable once loaded
  - treated as the highest-authority reference onboard

5.1.3 Mission Loading Mechanism (MVP)

Mission envelopes are loaded using a **simple, non-interactive loading tool**, such as:

- command-line utility, or
- minimal desktop application

No graphical mission-planning interface is required at this stage.

The mission loading workflow is:

1. Mission Envelope authored offline using the defined ICD
2. Envelope validated and signed
3. Envelope loaded into MicroMind-X prior to launch
4. Mission executed with pre-authorised fallback logic
5. NanoCorteX assumes autonomy upon link degradation or trust-loss triggers

This ensures **commander-bounded autonomy**, even in fully silent missions.

5.2 Stage 2 — Growth Deployment (TRL 6–7)

5.2.1 Deployment Objective

Transition MicroMind from a validated autonomy payload into an **operationally usable mission system**, suitable for routine employment, training, and OEM integration.

This stage builds directly on the MVP architecture, **without altering onboard autonomy logic**.

5.2.2 Factory Integration Mode

At higher TRLs, OEMs may adopt MicroMind through **factory integration**, enabling tighter physical and electrical coupling while preserving architectural boundaries.

Enhancements may include:

- Native sensor alignment and thermal calibration
- Embedded SDR front-ends with antenna diversity
- High-rate intent and trajectory interfacing through certified autopilot extension points
- Platform-specific terminal guidance tuning

Importantly:

- The flight-control core remains unmodified
- No custom autopilot forks are introduced
- MicroMind continues to operate as an autonomy payload

5.2.3 Commander Mission Definition (MicroMind-OS)

Stage 2 introduces **MicroMind-OS**, a full-featured commander mission definition interface.

Capabilities include:

- Graphical mission planning and validation
- Interactive definition of:
    - ingress / egress corridors
    - EW-aware routing constraints
    - safety and civilian reference layers
    - fallback and abort logic
- Cryptographic signing, versioning, and audit trails

MicroMind-OS produces the **same Mission Envelope** consumed in the MVP stage.
The ICD remains stable; only the authoring experience evolves.

5.3 Fleet-Wide Learning and Knowledge Consolidation

Across all deployment stages, each mission generates **tamper-evident logs** that are consolidated post-mission.

Captured data includes:

- Jammer signatures and power profiles
- GNSS spoofing patterns
- Link degradation and loss events
- Terrain correlation successes and failures
- Terminal-phase behaviour and outcomes

These records form a **sector-level EW and survivability knowledge base**, enabling future mission planning to account for observed adversary behaviour and environmental effects.

Learning improves **future missions**, without modifying authorised behaviour during active sorties.

5.4 Operational Boundaries

During MVP and early operational deployments, MicroMind intentionally does **not** support:

- in-mission re-tasking or dynamic objective changes
- collaborative multi-vehicle planning
- swarm-level autonomy
- human-in-the-loop terminal overrides once autonomy is engaged

These boundaries ensure deterministic behaviour, auditability, and survivability under BCMP-1 conditions.

5.5 Summary of Deployment Stages

Stage	TRL	Intent Handling	Primary Focus
Stage 1 — MVP	4–5	Offline ICD + simple loader	Validate autonomy under isolation
Stage 2 — Growth	6–7	MicroMind-OS GUI	Operational usability and scale

6 Hardware Requirements

The MicroMind MVP hardware is designed to **validate autonomy under BCMP-1 conditions**, not to represent a final production form factor. Hardware choices therefore prioritise **determinism, observability, and integration flexibility** over extreme SWaP optimisation.

All requirements in this section apply to the **MVP phase (TRL 4–5)** unless explicitly stated otherwise.

6.1 Design Philosophy

The MicroMind MVP hardware platform is governed by the following principles:

- Autonomy correctness precedes SWaP optimisation
- Hardware must support **graceful degradation**, not peak performance
- No dependence on GNSS, RF, or cloud timing
- Clean separation between autonomy and flight control
- Sufficient margin for instrumentation, logging, and iteration

Aggressive SWaP reduction is deliberately deferred until software behaviour, confidence management, and estimator stability are fully validated.

6.2 6.2 MVP SWaP Envelope

The MVP hardware shall conform to the following **hard constraints**:

Parameter	MVP Limit
Total system mass	≤ **300 g**
Total power consumption	≤ **25 W**
Supply voltage	Platform dependent (12–28 V typical)

This envelope supports tactical fixed-wing UAVs, VTOL platforms, and loitering munition classes relevant to MicroMind's initial objectives.

6.3 Compute Requirements

MicroMind-X requires a **heterogeneous compute platform** capable of deterministic execution of state construction, autonomy logic, and sensor fusion under degraded conditions.

6.3.1 Mandatory Capabilities (MVP)

- Quad- or hexa-core general-purpose CPU (ARM-A class or equivalent)
- Integrated or attached AI accelerator in the **3–8 TOPS** range
- Hardware DSP capability suitable for SDR pre-processing (FFT, spectral energy detection)
- Secure enclave / trusted execution environment for:
  - mission envelope validation
  - cryptographic key storage
- Hardware timestamping support for sensor ingestion

The MVP does **not** require high-end ISR-class AI accelerators. Deterministic execution and observability are prioritised over raw inference throughput.

6.4 Sensor Baseline (MVP)

The MVP sensor suite is intentionally minimal, selected to validate autonomy and navigation under GNSS denial while maintaining SWaP discipline.

6.4.1 Mandatory Sensors

- **IMU**
  - Mid-grade tactical IMU with stable bias characteristics
  - Primary propagation source under GNSS denial
- **EO Camera (Monocular or Stereo)**
  - Global shutter preferred
  - Used for visual–inertial odometry and terrain correlation
- **GNSS Receiver (Untrusted)**
  - Multi-constellation support
  - Used for integrity scoring and spoof detection, not primary navigation
- **Basic SDR Front-End**
  - Wideband RF energy observation
  - Jammer and spoof presence detection

6.5 Interfaces

The MVP hardware shall support the following interfaces, consistent with payload-style integration:

- **EO**: MIPI / CSI-2 or USB3
- **IMU / Magnetometer**: SPI / I²C
- **SDR**: USB3 or PCIe

- **Autopilot Interface**: CAN / UART / MAVLink
- **High-Bandwidth Internal Links**: Ethernet (optional)

No modification of the host flight-control core (e.g., PX4) is envisaged.

6.6 Timing and Synchronisation

MicroMind-X maintains the **authoritative autonomy time base**.

- All sensor data are translated into the MicroMind-X time domain
- Sensor-local clocks (including IMU clocks) are treated as measurement references
- GNSS time, when available, is used only as an advisory reference
- System time is monotonic and never discontinuous

Precision Time Protocol (PTP) is **not required for MVP**, and may be introduced selectively in later integration stages.

6.7 Security and Integrity

Hardware shall support mechanisms to ensure **autonomy integrity under isolation**:

- Secure boot chain
- Hardware root of trust
- AES-256 encrypted storage
- Cryptographically signed mission envelopes
- Tamper-evident audit logs
- PQC-ready certificate framework (architecture provisioned; not required to be active in MVP)

These mechanisms ensure that only **authorised intent** can be executed by onboard autonomy.

6.8 Growth and Optimisation Path

Following successful validation of autonomy logic and estimator stability:

- SWaP will be reduced iteratively
- Compute and sensor selections may be consolidated
- Platform-specific optimisation will be considered
- Higher-performance accelerators and sensors may be introduced selectively

No optimisation that compromises determinism, confidence observability, or architectural boundaries will be accepted.

6.9 Environmental and Qualification Targets

The MicroMind hardware platform is designed with the intent to meet **Indian military environmental and electromagnetic compatibility standards** at operational maturity.

Environmental compliance is **not a prerequisite for the MVP phase**, but is a defined requirement for post-MVP optimisation and induction-ready configurations.

6.9.1 Design Targets (Post-MVP)

The system shall be designed to meet, or be qualified against, the following standards during later integration and production phases:

- **JSS 55555:2000** — General environmental requirements for defence equipment
- **Operating temperature range:** −30 °C to +55 °C
- **MIL-STD-461F** — Electromagnetic interference and compatibility (EMI/EMC)

6.9.2 MVP Positioning

During the MVP phase:

- Hardware may utilise commercial or industrial-grade components
- Environmental qualification testing is **not mandatory**
- Design margins shall be maintained to allow migration to compliant units without architectural redesign

All hardware selected for the MVP shall be evaluated for **environmental upgradeability**, ensuring that post-MVP transition to compliant units does not require changes to the autonomy architecture, interfaces, or timing model.

6.10 Summary

- MVP hardware is constrained to **≤300 g / ≤25 W**
- Sensor set is **minimal by design**, not incomplete
- Compute prioritises determinism and observability
- Time and security are autonomy-driven, not platform-driven
- Optimisation is deferred until software behaviour is proven

7 TECHNOLOGY ADOPTION AND EVOLUTION STRATEGY

MicroMind is designed to evolve through a **measured, evidence-driven adoption process**, drawing selectively from aerospace, robotics, and other high-reliability industries while remaining grounded in operational validation.

Technology choices are not driven by novelty, but by demonstrated survivability, determinism, and field performance under BCMP-1 conditions.

7.1 Leveraging Established Autonomy Research (Under Evaluation)

Significant investment in autonomous vehicles and robotics has produced mature building blocks in areas such as:

- Visual–Inertial Odometry
- Object detection and tracking
- Path planning and obstacle avoidance

While the operational context of tactical UAVs differs materially from road and warehouse environments, selected components from this body of work may be adaptable.

Candidate technologies (e.g., ORB-SLAM3, Isaac ROS components, Nav2 planners) will be evaluated **only** where they meet MicroMind's requirements for:

- bounded behaviour
- confidence-aware degradation
- deterministic execution under adversarial conditions

No external module is assumed or committed at the MVP stage. Adoption decisions will be finalised only after controlled validation.

7.2 Dual-Use Supply Chain Considerations (Under Investigation)

Automotive-grade processors, sensors, and inertial systems offer potential advantages in cost, availability, and long-term supply stability.

However, their suitability for MicroMind deployments depends on demonstrated performance under:

- sustained vibration and shock
- extended temperature extremes
- long-duration mission reliability

Supplier studies and qualification trials will precede any adoption of dual-use components.

7.3 Synthetic Training and Simulation ("Digital Twin")

High-fidelity simulation environments provide scalable tools for:

- generating synthetic EO/IR datasets
- training and stress-testing terminal classifiers
- replaying EW-intensive mission profiles
- evaluating GNSS denial and spoofing scenarios

Simulation accelerates development and regression testing, but does **not** replace real-world trials. The value of synthetic environments will be judged by their fidelity and transferability to field performance.

7.4 Summary of Adoption Philosophy

MicroMind will follow a **disciplined technology adoption path**, characterised by:

- selective reuse over wholesale import
- validation before integration
- operational evidence over academic performance

Technologies are incorporated only when they demonstrably enhance survivability, autonomy integrity, and mission reliability under contested conditions.

8 Operational Use Cases

Section 8 describes representative operational problem statements and target scenarios derived from contemporary conflict environments. The behaviours described herein reflect the intended design response of the MicroMind architecture to these problems. They articulate design intent and operational aspiration, not binding functional guarantees or stage-specific performance commitments.

8.1 THE "MOVING RADAR" SCENARIO (COUNTER-ISR STRIKE)

Target: Long-Range Air Defence Radars (e.g., Nebo-SVU equivalent).

The Problem: Target moves 15km during the drone's flight. GNSS is spoofed.

MicroMind Solution: "In-Flight Re-Tasking via Mesh Relay."

- The MicroMind-X onboard computer integrates with a secure SDR to receive encrypted "ZPI Burst" updates from a standoff reconnaissance drone (SHARK-M role) *.
- NanoCorteX executes a "Sector Search" using Visual Odometry to re-acquire the target autonomously, independent of GPS.

***Note -** “ZPI Burst Relay is a Phase-2 capability; included here for completeness of operational concept.”

8.2 THE "JAMMER KILLER" SCENARIO (SEAD/DEAD)

Target: High-Power EW Nodes & Satcom Jammers (e.g., R-330Zh Zhitel equivalent).

The Problem: The target *is* the jammer. It generates a "Cone of Silence" that blinds the drone's receiver 5/10 kms out.

MicroMind Solution: "Geometric Approach & L10s-SE."

- MicroMind-OS calculates an "Off-Axis" approach, routing the drone to attack from the jammer's "blind spot" or a high-angle zenith dive.
- As the link dies, the "L10s-SE" activates. The drone locks onto the specific thermal signature of the jammer's generator and executes the strike autonomously.

8.3 THE "HIDDEN LAUNCHER" SCENARIO (TIME-CRITICAL)

Target: Mobile Missile Launchers (e.g., Buk-M3 or HQ-9) concealed in treelines.

The Problem: Target is camouflaged. Decision window is <2 minutes before it moves ("Shoot and Scoot").

MicroMind Solution: "Thermal Discrimination & Single-Cycle Closure."

- The "DMRL" (Decoy Multi-frame Rejection Logic) module analyses Thermal Inertia. It distinguishes the heat of a real engine block from a cold wooden decoy.
- The system validates the target and strikes in a single pass, removing the need for a second "confirmation loop" that wastes time

Additional Use Cases that can be delivered

- High Altitude ISR along LAC
- Urban engagement with terminal safety constraints
- Maritime ISR and EO/IR terminal refinement
- Deep Strike FPV mission under EW pressure

9 Glossary of Terms Used

- **A*** – A-star pathfinding algorithm used for corridor and route generation.
- **AES-25**6 – Advanced Encryption Standard, 256-bit encryption used for mission package and logs.
- **BIM** – Beacon & Integrity Monitor; evaluates GNSS trust and detects spoofing.
- **Burst Stats** – Statistical parameters extracted from SDR RF bursts for EW detection.
- **CAN** – Controller Area Network; UAV avionics communication bus.
- CEMS – Cooperative EW Sharing Module; exchanges EW snapshots between UAVs.
- CNN – Convolutional Neural Network; used for decoy rejection in terminal phase.
- Covariance – Statistical confidence of fused pose estimation.
- CPRA GNSS – Controlled Reception Pattern Antenna; mitigates spoofing/jamming (future optional integration).
- DEM – Digital Elevation Model; terrain height data used for masking and correlation.
- DF – Direction Finding; adversary technique for locating UAV signals.
- DMRL – Decoy Multi-frame Rejection Logic; filters false targets using EO/IR and thermal signatures.
- EO/IR – Electro-Optical / Infrared cameras.
- EKF / UKF – Extended / Unscented Kalman Filters; used in state estimation and sensor fusion.
- EW – Electronic Warfare; includes jamming, spoofing, interference.
- FC – Flight Controller; executes attitude and navigation commands from NanoCorteX.
- FPV – First Person-View drone, commonly used in strike missions.
- GNSS – Global Navigation Satellite System; GPS, GLONASS, Galileo, etc.
- GPS Spoofing – Deception technique injecting false GNSS data.
- G/A/R – GNSS trust state levels:
- Red: compromised (abort GNSS use)
- HIL – Hardware-in-the-loop testing environment.
- IMU – Inertial Measurement Unit; accelerometer, gyroscope, barometer.
- INS – Inertial Navigation System; merges IMU with other data to estimate UAV position.
- IQ Data – In-phase and Quadrature samples captured by SDR for signal analysis.
- L10s-SE – Last-10-Second Safety Envelope; enforces ROE and abort logic in terminal phase.
- Loiter Mode – UAV maintains position during link loss.
- LOS – Line of Sight; relevant to both RF links and terrain masking.
- MAVLink – Common open protocol between flight controllers and onboard computers.
- MicroMind-OS – Mission planning system used by commander.
- **MicroMind-X** – Onboard mission computer integrating sensors and SDR.
- **NanoCorteX** – Autonomy engine executing navigation, EW-aware routing, and terminal actions.

- **NMEA** – GNSS metadata/log format used for integrity scoring.
- **NPU** – Neural Processing Unit; optional hardware for onboard inference acceleration.
- **PSD** – Power Spectral Density; used in SDR-based jammer detection.
- **RAIM** – Receiver Autonomous Integrity Monitoring; GNSS integrity analysis.
- **RF** – Radio Frequency; includes command links and EW signals.
- **ROE** – Rules of Engagement; governs allowed or restricted actions during mission.
- **RSSI** – Received Signal Strength Indicator; used to detect jamming/bearing estimation.
- **SDR** – Software Defined Radio used for EW observation and micro-burst communications.
- **Sensor Fusion** – Combining IMU, VO, GNSS, EO/IR, and SDR into unified state.
- **SHM** – Silent Homing Mode; final-phase navigation with zero RF emissions.
- **SLAM** – Simultaneous Localisation and Mapping; partial elements are used in visual odometry.
- **Spoofing** – Electronic attack simulating false GNSS or false RF signals.
- **State Vector** – UAV's full navigation state including position, attitude, velocity, covariance.
- **SWaP** – Size, Weight, and Power constraints.
- **Temporal Association** – Multi-frame target tracking and verification.
- **Terminal Guidance** – Optical/IR based final navigation into target under autonomy.
- **Thermal ROI** – Region-of-interest from IR imaging.
- **UKF** – Unscented Kalman Filter; improved nonlinear estimator.
- **UART –** Universal Asynchronous Receiver–Transmitter; serial communication interface.
- **VO / VIO –** Visual Odometry / Visual-Inertial Odometry; used for GNSS-denied navigation.
- **ZPI Burst** – Zero Probability of Intercept burst communication protocol.